REVISION HISTORY				
REV	ECN	DESCRIPTION	DATE	APPROVED
A	F050014	RELEASE PRINT	3/9/2005	dmjohnson
B	F110172	REDRAWN INVENTOR, ADD SHEETS 2-4	10/27/2011	dmjohnson
C	F110241	ADD MOTOR INFO NOTES & MOTOR W/O SWITCH CUTAWAY VIEWS	11/9/2011	dmjohnson
D	F120088	ADD SHEET 5: VS BTM FAN	10/24/2012	dmjohnson
E	F130069	1 HP DRIVE MOTOR WAS 3/4 HP	5/7/2013	dmjohnson
F	F180059	ADDED SHEETS 6, 7, & 8	7/13/2018	samelching

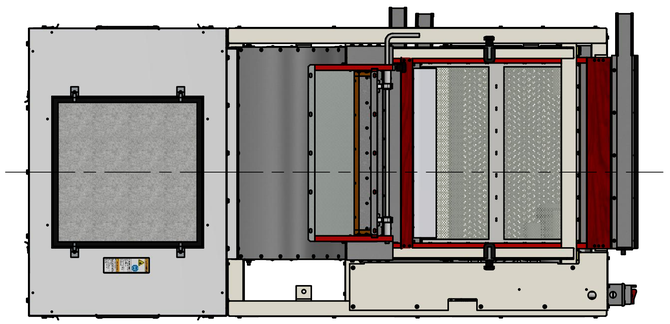

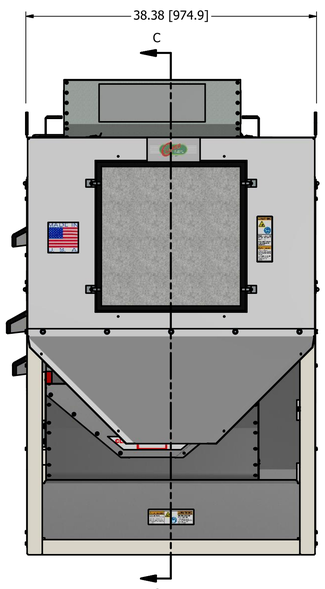

REAR VIEW INSTALL

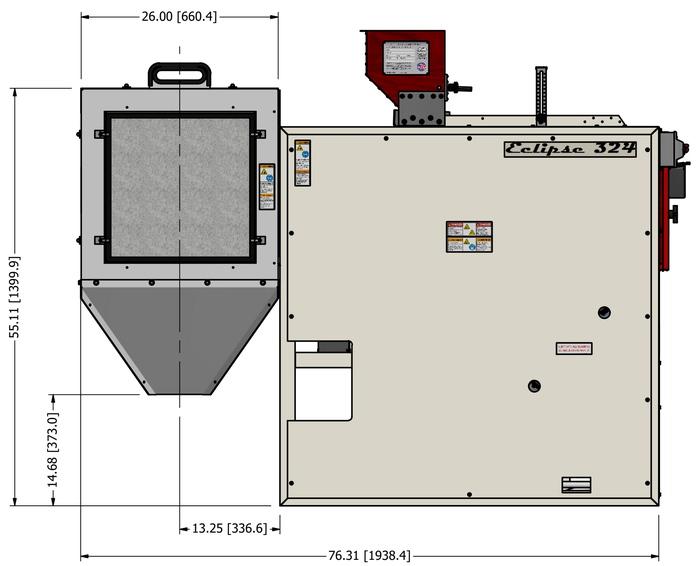

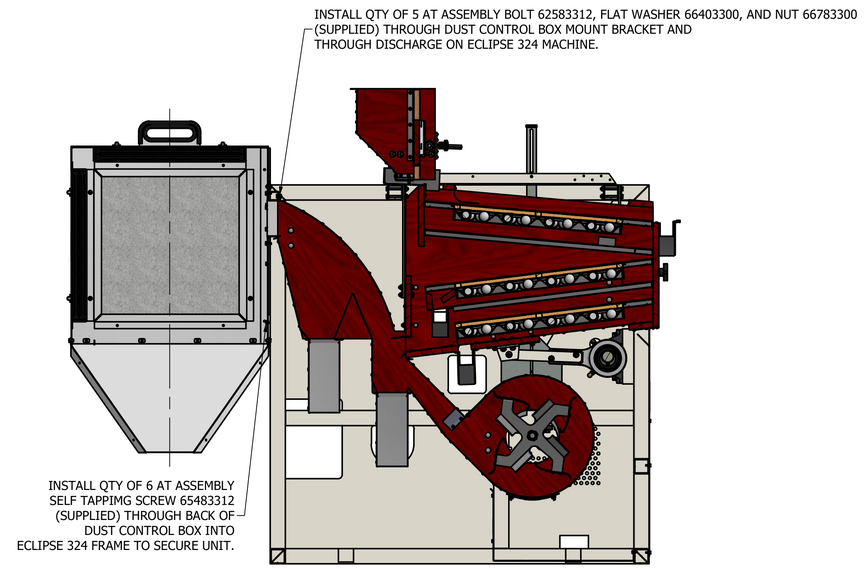

SECTION C-C

NOTES:
1. DO NOT SCALE FROM DRAWING.
2. ALTERNATIVE UNITS [X.X] IN MILLIMETERS.
3. MACHINE WEIGHT AS SHOWN: 770 LBS / 349 KG. SHIPPING WEIGHT AS SHOWN: 840 LBS / 381 KG.
4. 0.50" [12.7] TOTAL THROW, SHOE.
5. VARIABLE FAN AIR DISCHARGE: 0 CFM / 0 CMM TO 1600 CFM / 45 CMM MAXIMUM.
6. FOUR 1/2-13 GRADE 5 BOLTS RECOMMENDED TO LAG FRAME THRU FLOOR JOISTS.
7. RECOMMENDED MAINTENANCE CLEARANCE FROM FRAME: 36.00" [915] AT FRONT & SIDES, 12.00" [305] AT REAR.
8. FUSED DISCONNECT REQUIRED PRIOR TO MACHINE MOUNTED SWITCH BOX.
9. VARIABLE SPEED AC BOTTOM FAN MOTOR: 100-120 VAC 1Ø 50/60 HZ POWER IN, 1 HP 3Ø 60 HZ 230/460V INVERTER DUTY TENV, FULL LOAD AMPS 3.0.
10. VARIABLE SPEED AC BOTTOM FAN MOTOR: 200-240 VAC 1Ø 50/60 HZ POWER IN, 1 HP 3Ø 60 HZ 230/460V INVERTER DUTY TENV, FULL LOAD AMPS 3.0.
11. VARIABLE SPEED AC BOTTOM FAN MOTOR: 380-440 VAC 3Ø 50/60 HZ POWER IN, 1 HP 3Ø 60 HZ SPECIAL, CALL FOR AVAILABILITY.
12. VARIABLE SPEED AC BOTTOM FAN MOTOR: 440-480 VAC 1Ø 50/60 HZ POWER IN, 1 HP 3Ø 60 HZ 230/460V INVERTER DUTY TENV, FULL LOAD AMPS 1.5.
13. VARIABLE SPEED AC BOTTOM FAN MOTOR: 500-600 VAC 3Ø 50/60 HZ POWER IN, 1 HP 3Ø 60 HZ SPECIAL, CALL FOR AVAILABILITY.
14. VARIABLE SPEED DC BOTTOM FAN MOTOR: 100-120 VAC 1Ø 50/60 HZ POWER IN, 1 HP 90VDC TEFC, FULL LOAD AMPS 10.0 ADC.
15. VARIABLE SPEED DC BOTTOM FAN MOTOR: 200-240 VAC 1Ø 50/60 HZ POWER IN, 1 HP 180VDC TEFC, FULL LOAD AMPS 5.0 ADC.
15. FRAME CONSTRUCTION: A500 GR. B STRUCTURAL CFS, PAINTED FINISH.

DUST CONTROL BOX

CLIPPER SEPARATION TECHNOLOGIES SINCE 1869
DIVISION OF
A.T.FERRELL COMPANY
1440 S ADAMS ST
BLUFFTON, INDIANA
46714 - USA
PH: 260-824-3400
FAX: 260-824-5463

This drawing is the property of the A.T. Ferrell Company, Inc and must be returned immediately upon request. No part of this drawing may be reproduced, stored in a retrieval system or transmitted in any form or by any means, without prior written consent of the A.T. Ferrell Company, Inc.

DRAWN BY:	DRAWN DATE:	APPROVED BY:
dmjohnson	10/14/2011	DMJ

TOLERANCES EXCEPT AS NOTED
DECIMAL: XX ± .030, XXX ± .005, XXXX ± .001
FRACTIONAL: ± 1/32
ANGULAR: ± 1/2°

TITLE: CLEANER ASSY, RH & CENTER, ECLIPSE 324
FINISH: TOUCH-UP PAINT

CAD	SCALE:	SHEET:	SIZE:	PART NUMBER:	REV:
NO MANUAL CHANGES	1:10	8 OF 8	D	F60000000-I	F