3/9/2009 11:23:22 AM Last Saved By alleng TimeStamp

Reference File: c:\inventor workspace\Inventor Files\Ferrell-Ross\K100-00450-04909\K100-00451.iam

| REVISION HISTORY | | | | |
|---|---|---|---|---|
| REV | ECN | DESCRIPTION | DATE | APPROVED |
| A | K990047 | RELEASE PRINT | 7/9/1999 | AP |
| B | K070187 | 66783300(8) WAS 66083300(8) & 66443300(8), K200-01670(40 WAS 66405200(4) | 1/17/2008 | DMJOHNSON |

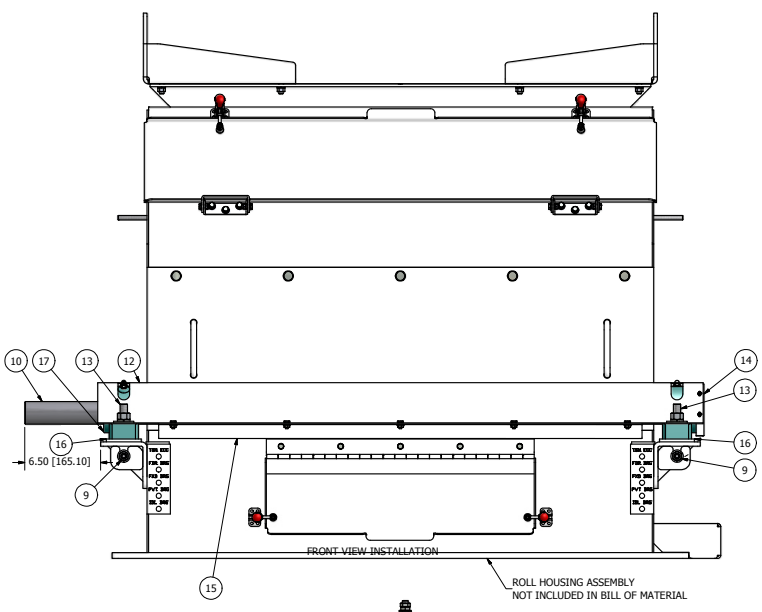


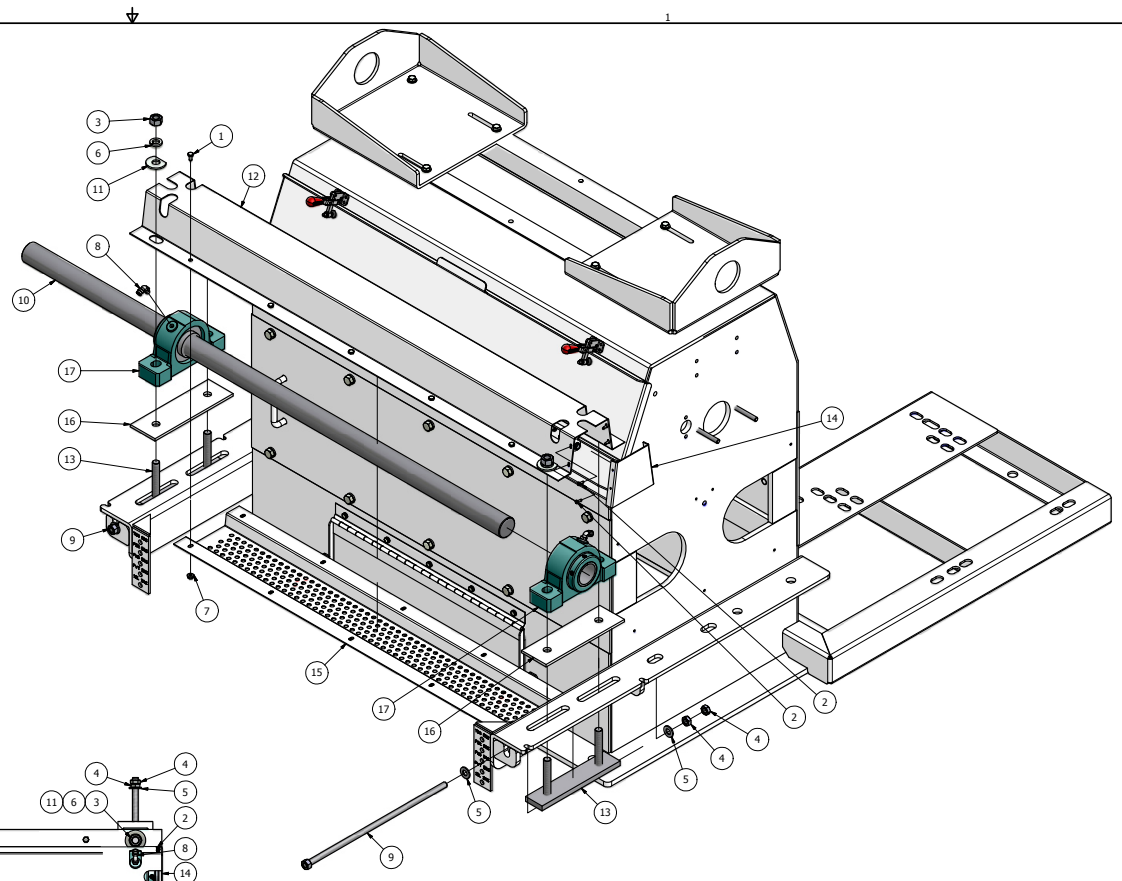


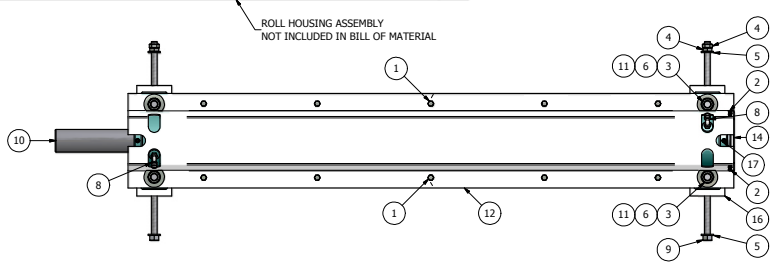

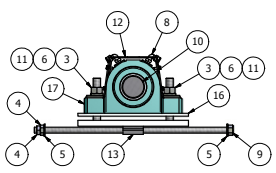

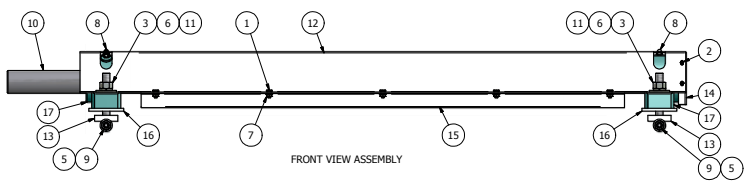


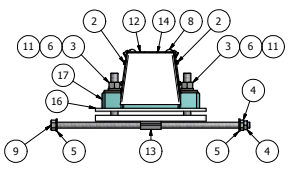

| ITEM | PART NUMBER | QTY | DESCRIPTION |
|---|---|---|---|
| 17 | K902-11301 | 2 | BRNG, PB 2 HOLE 1.938" |
| 16 | K200-10884 | 2 | SPACER, IDLER BEARING 10/12/18" |
| 15 | K200-10680 | 1 | GUARD, BOTTOM, DIFF IDLER, 10 X 42" |
| 14 | K200-10655 | 1 | END, GUARD, IDLER SHAFT 10/12" |
| 13 | K200-10580 | 2 | SLIDE WLDMT, IDLER BEARING, 10-12" |
| 12 | K200-01676 | 1 | GUARD, DIFF SHAFT, 10 X 42" |
| 11 | K200-01670 | 4 | WASHER, FLAT SHEARED 5/8" |
| 10 | K200-00096 | 1 | SHAFT, DIFFERENTIAL IDLER, 10 X 42" |
| 9 | K100-01413 | 2 | SCREW WLDMT, IDLER BEARING, XHD 18" |
| 8 | 70012050 | 2 | CPLG, ELBOW 90 1/8-27M NPT X 1/4" TBG |
| 7 | 66783300 | 10 | NUT, HEX SERR LOCK 1/4-20 |
| 6 | 66445800 | 4 | WASHER, LOCK HELICAL 5/8" |
| 5 | 66405200 | 4 | WASHER, FLAT 1/2" TYPE A |
| 4 | 66105200 | 4 | NUT, HEX JAM 1/2-13 |
| 3 | 66085800 | 4 | NUT, HEX 5/8-11 |
| 2 | 65482212 | 4 | SCW, MACH 8-32 X 1/2" HX SLT HD T/C |
| 1 | 62583312 | 10 | HHCS, 1/4-20 X 1/2" |

NOTES:
1. DO NOT SCALE FROM DRAWING.
2. ONE PIECE REQUIRED PER K000-01235: ROLLER MILL ASSY, SINGLE HI RH RF 1.5:1 10 X 42".
3. ONE PIECE REQUIRED PER K000-01241: ROLLER MILL ASSY, SINGLE HI RH VF 1.5:1 10 X 42".
4. TWO PIECES REQUIRED PER K000-01255: ROLLER MILL ASSY, 2 HI RH RF 1.5:1 10 X 42".
5. TWO PIECES REQUIRED PER K000-01261: ROLLER MILL ASSY, 2 HI RH VF 1.5:1 10 X 42".
6. ONE PIECE REQUIRED PER K000-01270: ROLLER MILL ASSY, SINGLE HI LH RF 1.5:1 10 X 42".
7. ONE PIECE REQUIRED PER K000-01276: ROLLER MILL ASSY, SINGLE HI LH VF 1.5:1 10 X 42".
8. TWO PIECES REQUIRED PER K000-01285: ROLLER MILL ASSY, 2 HI LH RF 1.5:1 10 X 42".
9. TWO PIECES REQUIRED PER K000-01291: ROLLER MILL ASSY, 2 HI LH VF 1.5:1 10 X 42".

This drawing is the property of the A.T. Ferrell Company, Inc and must be returned immediately upon request. No part of this drawing may be reproduced, stored in a retrieval system or transmitted in any form or by any means, without prior written consent of the A.T. Ferrell Company, Inc

CAD
NO MANUAL CHANGES
TOLERANCES EXCEPT AS NOTED

Ferrell-Ross
MATERIALS PROCESSING & RECOVERY
SINCE 1869
DIVISION OF A. T. FERRELL COMPANY — BLUFFTON, INDIANA - USA

| DECIMAL: | FINISH: | SCALE: | DRAWN BY: | APPROVED BY: |
|---|---|---|---|---|
| .XXX ± .005 .XX ± .030 | NONE | 0.19:1 | dmjohnson | DMJ |

FRACTIONAL: ± 1/32
TITLE: IDLER ASSY, DIFFERENTIAL 1.5:1, 10 X 42"

| ANGULAR: | DATE: | SIZE: | PART NUMBER: | SHEET: |
|---|---|---|---|---|
| ± 1/2- | 1/1/2008 | D | K100-00451 | 1 of 1 |

K100-00451